COMMERCIAL PRODUCT RANGE

LIVE WITH ILVE

ILO60MMX 60cm built-in multifunction electric oven

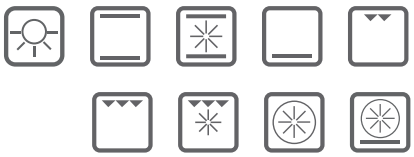

ILO60MMX BUILT-IN ELECTRIC OVEN

FEATURES

- tangential fan cooling
- 60 minute bell timer
- knob control
- Accurate digital thermostat control: 0°C-250°C
- S-MOVE Soft close hinges
- PANA-view glass door with full visibility into the cooking cavity from the outside
- Inner door with 'American' Style robust commercial design

FINISH

- ANTI-fingerprint AS430 stainless steel

SAFETY

- Cool touch triple glazed glass door

FUNCTIONS

- 9 functions — pizza, fan forced, fan grill, static grill,half static grill, bottom element, fan assisted, convection, light

CLEANING

- ULTRA-Clean smooth grey cavity
- easy-clean removable inner glass & door

CAPACITY & INTERIOR

- 65 litre oven capacity
- 5 cooking levels
- Dark / black tinted glass on door exterior

ACCESSORIES

- 1 x oven rack and 1 x grill pan & grill insert

TECHNICAL INFORMATION

- 3.5kW/hr total electrical consumption
- 15 amp electrical connection, plug & lead supplied
- Size: 594W x 594H x 535D + 21mm fascia

New style inner door

S-move soft & gentle closing door hinges

COLOUR PALETTE

- Available in Stainless Steel

EAN 9341584037558

DISCLAIMER
Eurolinx Pty Ltd, trading as ILVE Appliances, is continually seeking ways to improve the design specifications, aesthetics and production techniques of its products. As a result alterations to our products and designs take place continually. Whilst every effort is made to produce information and literature that is up to date, this brochure should not be regarded as an infallible guide to the current specifications, nor does it constitute an offer for the sale of any particular product. Product dimensions indicated in our literature is indicative only. Actual product only should be used to define dimension cutouts. Distributors, and retailers are not agents of ILVE Appliances and are not authorized to bind ILVE Appliances by any express or implied undertaking or representation.

COMMERCIAL PRODUCT RANGE

LIVE WITH ILVE

ILO60MMX 60cm built-in multifunction electric oven

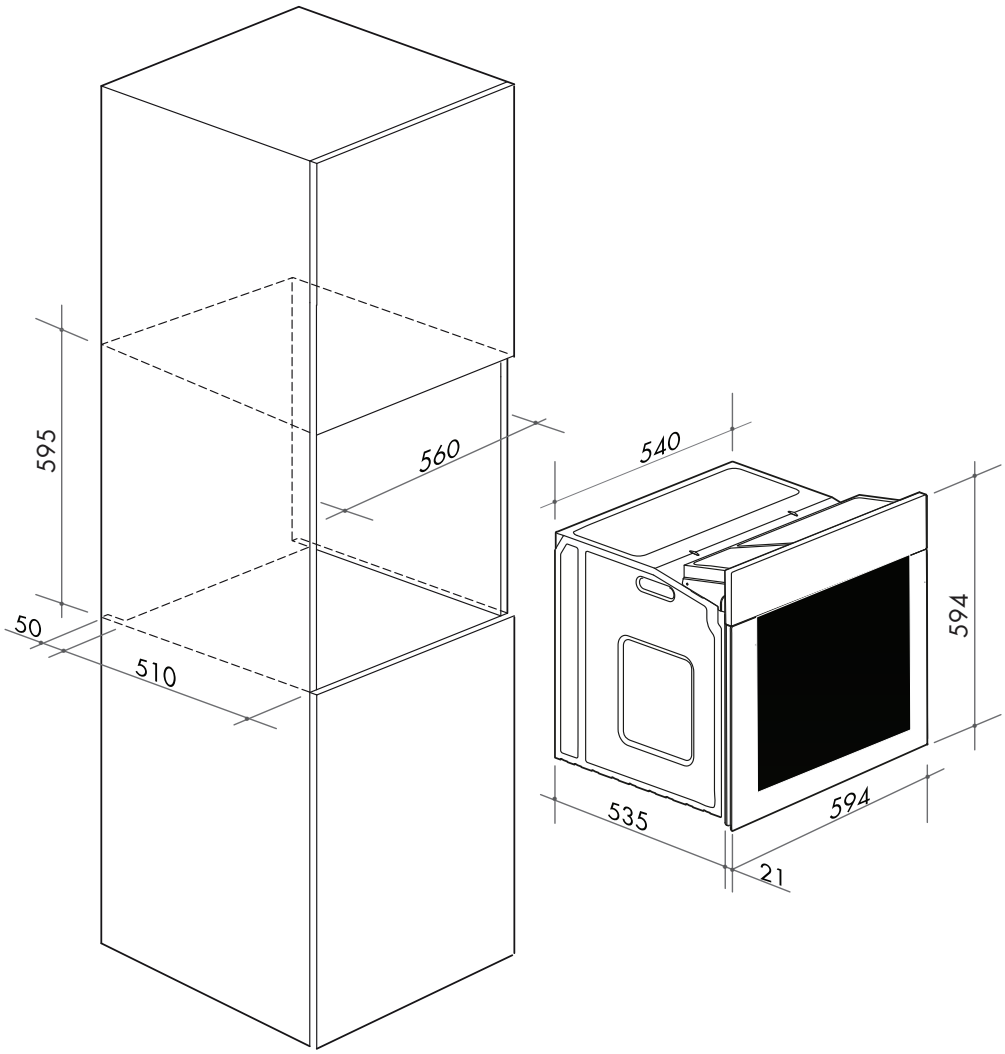

NB: drawings are not to scale — they are to be used as a guide only

IL110918

EAN 9341584037565

DISCLAIMER
Eurolinx Pty Ltd, trading as ILVE Appliances, is continually seeking ways to improve the design specifications, aesthetics and production techniques of its products. As a result alterations to our products and designs take place continually. Whilst every effort is made to produce information and literature that is up to date, this brochure should not be regarded as an infallible guide to the current specifications, nor does it constitute an offer for the sale of any particular product. Product dimensions indicated in our literature is indicative only. Actual product only should be used to define dimension cutouts. Distributors, and retailers are not agents of ILVE Appliances and are not authorized to bind ILVE Appliances by any express or implied undertaking or representation.

FOLLOW US ON:

facebook.com/ILVEappliances instagram.com/ILVE_appliances youtube.com/ILVEappliances BLOG livewithilve.com

Australia National Telephone Number 1300 MYILVE (694 583) New Zealand Telephone Number 64 3 344 5913
ILVE showroom hours: Tuesday to Friday - 9am-5pm, Saturday - 10am-4pm, Sunday and Monday - closed
*** Melbourne showroom hours:** Tuesday to Saturday - 10am-4pm

ilve.com.au

NSW & ACT (Head Office)
48-50 Moore Street
Leichhardt
F 02 8569 4699

VIC & SA
1211 Toorak Road
Camberwell
F 03 9809 2155

QLD
1/42 Cavendish Road
Coorparoo
F 07 3397 0850

WA & NT
Unit 10/55 Howe Street
Osborne Park
F 08 9201 9188

TAS
3 Pear Avenue
Derwent Park
P 03 6272 7386

New Zealand
PO Box 11.160
Sockburn Christchurch
F 03 344 5906